ADAPTIVE BLIND EQUALIZATION OF SIMO SYSTEMS BASED ON CANONICAL CORRELATION ANALYSIS

Javier Vía and Ignacio Santamaría

Dept. of Communications Engineering. University of Cantabria
39005 Santander, Cantabria, Spain
E-mail: {jvia,nacho}@gtas.dicom.unican.es

ABSTRACT

In this work we consider the problem of blind equalization of single-input multiple-output systems (SIMO), which is reformulated as a Canonical Correlation Analysis (CCA) problem. CCA is a classical tool in statistical analysis that measures the linear relationship between two or several data sets, and, in previous works, we have shown that CCA can be reformulated as a set of coupled least squares regression problems, which allows us to derive in a straightforward manner a recursive least squares (RLS) algorithm for on-line CCA. This algorithm can be directly applied to the blind equalization problem or easily modified to obtain a Soft Decision Feedback Equalizer (SDFE). Some simulation results show that the CCA-based algorithms outperforms other blind equalization techniques based on second-order statistics.

1. INTRODUCTION

Blind identification of single-input multiple-output (SIMO) channels is a common problem encountered in communications, sonar and seismic signal processing. SIMO channels appear either when the signal is oversampled at the receiver or from the use of an array of antennas. It is well known that, if the input signal is informative enough and the FIR channels are co-prime, second order statistics are sufficient for blind equalization. The most popular SOS-based approach for blind equalization is the Modified Second Order Statistics Algorithm (MSOSA) [1]. A drawback of this method is its bad performance for ill-conditioned channels or its noise-enhancement effect for strongly colored signals.

In this paper we consider the application of Canonical Correlation Analysis (CCA) to blind equalization of SIMO channels. CCA is a well-known technique in multivariate statistical analysis, which has been widely used in economics, meteorology, and in many modern information processing fields, such as communication theory, statistical signal processing, and Blind Source Separation (BSS).

CCA was developed by H. Hotelling [2] as a way of measuring the linear relationship between two multidimensional sets of variables and was later extended to several data sets [3]. Recently, the reformulation of CCA as a set of LS regression problems was exploited to derive an on-line CCA algorithm [4]. Here, we show that maximizing the correlation among the outputs of the equalizers (i.e. CCA) is a reasonable equalization criterion, which outperforms other blind equalization techniques such as the MSOSA.

This work was supported by MCYT (Ministerio de Ciencia y Tecnología) under grants TIC2001-0751-C04-03 and TEC2004-06451-C05-02.

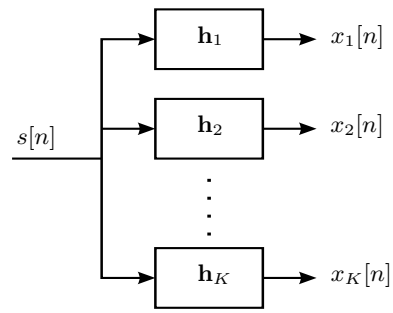

Fig. 1. SIMO system.

Finally, the adaptive blind equalization algorithm is modified in a straightforward manner to obtain a Soft Decision Feedback Equalizer (SDFE) and some simulation results show the performance of the different adaptive blind equalization algorithms.

2. PROBLEM FORMULATION

Suppose the system shown in Fig. 1, where $s[n]$ is a source signal which is sent through K different finite impulse response (FIR) channels satisfying the *length-and-zero condition*

Condition 1 (Length and zero) *K FIR channels of length L satisfy the* length-and-zero condition *iff*

1. $h_k[0] \neq 0$ *and* $h_l[L-1] \neq 0$ *for some* $1 \leq k, l \leq K$.
2. *The K channels are coprime, i.e. they do not share any common zeros.*

The observation vector $\mathbf{x}_r[n] = [x_1[n], \ldots, x_K[n]]^T$ can be written as

$$\mathbf{x}_r[n] = \mathbf{h}[n] * s[n],$$

or in matrix form

$$\mathbf{x}[n] = \mathbf{H}\mathbf{s}_{L_{eq}}[n], \quad \text{or} \quad \mathbf{X}[n] = \mathbf{H}\mathbf{S}_{L_{eq}}[n], \tag{1}$$

where we have used the following definitions

$$\begin{aligned}
\mathbf{h}[n] &= [h_1[n], \ldots, h_K[n]]^T, \\
\mathbf{H} &= \begin{bmatrix} \mathbf{h}[0] & \cdots & \mathbf{h}[L-1] & \cdots & \mathbf{0} \\ \vdots & \ddots & \ddots & \ddots & \vdots \\ \mathbf{0} & \cdots & \mathbf{h}[0] & \cdots & \mathbf{h}[L-1] \end{bmatrix}, \\
\mathbf{s}_{L_{eq}}[n] &= [s[n], \cdots, s[n-L_{eq}-L+2]]^T, \\
\mathbf{x}[n] &= \left[\mathbf{x}_r^T[n], \cdots, \mathbf{x}_r^T[n-L_{eq}+1]\right]^T, \\
\mathbf{S}_{L_{eq}}[n] &= \left[\mathbf{s}_{L_{eq}}[n] | \cdots | \mathbf{s}_{L_{eq}}[n+N-1]\right], \\
\mathbf{X}[n] &= [\mathbf{x}[n] | \cdots | \mathbf{x}[n+N-1]],
\end{aligned}$$

and where L_{eq} is a parameter determining the dimensions of the vectors and matrices, and satisfying the *equalizer length condition*

Condition 2 (Equalizer length) *The parameter L_{eq} satisfies the* equalizer length condition *iff*

$$L_{eq} \geq \frac{L-1}{K-1}.$$

Based on conditions 1 and 2, it is easy to prove that $\mathbf{H}$ is a full column rank matrix with $M = L_{eq} + L - 1$ columns. Hence, from (1), there exists a matrix $\mathbf{W} = [\mathbf{w}_1, \cdots, \mathbf{w}_M]$, of dimensions $KL_{eq} \times M$, such that

$$\mathbf{s}_{L_{eq}}[n] = \mathbf{W}^H \mathbf{x}[n],$$

and then, for $k, l = 1, \ldots M$ and every integer n we have

$$\mathbf{w}_k^H \mathbf{x}[n+k] = \mathbf{w}_l^H \mathbf{x}[n+l]. \tag{2}$$

Furthermore, it has been proved in [5] that, if the channel satisfies the length-and-zero condition and the channel input is $(L_{eq}+1)$-*th order persistently exciting*, i.e. the linear complexity [6] of the source signal is $C(s[n]) \geq L_{eq} + L$,

Condition 3 (Persistently exciting) *A sequence $s[n]$ is said to be $(L_{eq}+1)$-th order persistently exciting iff $\mathbf{S}_{L_{eq}+1}[n]$ is of full row rank for some N.*

then the equalizers $\mathbf{w}_k$'s satisfying (2) will satisfy

$$\mathbf{W}^H \mathbf{H} = c\mathbf{I},$$

where c is some nonzero constant. Then we can use (2) to solve the equalization problem, and considering the channel noise, the estimated signals can be defined, for $k = 1, \ldots, M$, as

$$\hat{s}_k[n] = \mathbf{w}_k^H \mathbf{x}[n+k-1] \quad ; \quad \hat{\mathbf{s}}_k = \mathbf{w}_k^H \mathbf{X}[n+k-1],$$

and the final estimated signal is obtained as

$$\hat{\mathbf{s}} = \frac{1}{M} \sum_{k=1}^{M} \hat{\mathbf{s}}_k. \tag{3}$$

3. MSOSA PROCEDURE

In [1], the authors derive the *modified second-order statistics based algorithm* (MSOSA), which is based on the minimization of the following cost function

$$J_{MSOSA} = \sum_{k,l=1}^{M} E\left[\hat{s}_k[n] - \hat{s}_l[n]\right]^2. \tag{4}$$

subject to certain nontrivial restrictions. Applying a gradient based procedure, the MSOSA update rules are

$$\begin{aligned}
\overline{\mathbf{w}}(n+1) &= \mathbf{w}(n) + \mu \hat{\mathbf{R}}(n+1)\mathbf{w}(n), \\
\alpha(n+1) &= \left(\sum_{k=1}^{L_{eq}+L-1} \overline{\mathbf{w}}_k^H(n+1) \hat{\mathbf{R}}_0(n+1) \overline{\mathbf{w}}_k(n+1) \right)^{\frac{1}{2}}, \\
\mathbf{w}(n+1) &= \frac{c}{\alpha(n+1)} \overline{\mathbf{w}}(n+1),
\end{aligned}$$

where $\mathbf{w}^T(n) = [\mathbf{w}_1^T(n), \ldots, \mathbf{w}_M^T(n)]$, μ is a stepsize, c is some nonzero constant, and the shifted correlation matrices are estimated as

$$\hat{\mathbf{R}}_k(n+1) = \lambda \hat{\mathbf{R}}_k(n) + (1-\lambda)\mathbf{x}[n-k]\mathbf{x}^H[n],$$

where $0 \leq \lambda \leq 1$ is a forgetting factor and the composite matrix $\hat{\mathbf{R}}(n)$ is

$$\hat{\mathbf{R}}(n) = \begin{bmatrix} (M-1)\hat{\mathbf{R}}_0(n) & -\hat{\mathbf{R}}_1(n) & \cdots & -\hat{\mathbf{R}}_{M-1}(n) \\ -\hat{\mathbf{R}}_1(n) & \ddots & \ddots & \vdots \\ \vdots & \ddots & \ddots & \vdots \\ -\hat{\mathbf{R}}_{M-1}^H(n) & \cdots & \cdots & (M-1)\hat{\mathbf{R}}_0(n) \end{bmatrix}.$$

From the above definitions it is easy to prove that the MSOSA procedure is equivalent to the well-known power method to extract the main eigenvector and eigenvalue of $\hat{\mathbf{R}}(n)$, which is the solution of the problem of minimizing (4) subject to $\|\mathbf{w}(n)\| = c$. Furthermore, this solution is closely related to Principal Component Analysis (PCA) and the channel estimation technique proposed in [6].

Finally, a related algorithm is proposed in [7], which can be interpreted as a two steps algorithm based on the MSOSA solution. In the first step the MSOSA solution is obtained, and then, the M equalized signals are linearly combined, using some optimality criterion (instead of (3)), to form the final estimated signal.

4. CCA PROCEDURE

4.1. Proposed Cost Function

The proposed cost function is based on the generalization to $M > 2$ data sets of the canonical correlation analysis (CCA) problem proposed in [4], which can be interpreted as the problem of finding the M equalizers $\mathbf{w}_k$ providing the maximum correlated estimated signals $\hat{\mathbf{s}}_k$, i.e. defining $\mathbf{R}_{kl} = \mathbf{X}[n+k-1]\mathbf{X}^H[n+l-1]$, we will try to maximize the coefficient

$$\beta = \frac{1}{M^2} \sum_{k,l=1}^{M} \hat{\mathbf{s}}_k \hat{\mathbf{s}}_l^H = \frac{1}{M^2} \sum_{k,l=1}^{M} \mathbf{w}_k^H \mathbf{R}_{kl} \mathbf{w}_l, \tag{5}$$

subject to the following restriction

$$\frac{1}{M}\sum_{k=1}^{M}\|\hat{\mathbf{s}}_k\|^2 = c, \tag{6}$$

which is used to avoid the trivial solution. Furthermore, this restriction makes the CCA problem in (5) equivalent to minimize $\sum_{k,l=1}^{M}\|\hat{\mathbf{s}}_k - \hat{\mathbf{s}}_l\|^2$, and then, the CCA problem can be interpreted as the deterministic version of the MSOSA problem with a different nontrivial restriction. This new restriction in the energy of the outputs of the equalizers produces a mitigation of the noise enhancement problem for colored signals.

Using matrix notation, the CCA problem (5) can be formulated as

$$\underset{\mathbf{w}}{\text{argmax}} \quad \beta = \frac{1}{M^2}\mathbf{w}^H\mathbf{R}\mathbf{w} \quad \text{s.t.} \quad \frac{1}{M}\mathbf{w}^H\mathbf{D}\mathbf{w} = c, \tag{7}$$

where

$$\mathbf{R} = \begin{bmatrix} \mathbf{R}_{11} & \cdots & \mathbf{R}_{1M} \\ \vdots & \ddots & \vdots \\ \mathbf{R}_{M1} & \cdots & \mathbf{R}_{MM} \end{bmatrix}; \ \mathbf{D} = \begin{bmatrix} \mathbf{R}_{11} & \cdots & \mathbf{0} \\ \vdots & \ddots & \vdots \\ \mathbf{0} & \cdots & \mathbf{R}_{MM} \end{bmatrix}.$$

The solution of (7) is obtained using the method of Lagrange multipliers, which reduces the CCA problem to find the eigenvector associated to the maximum eigenvalue of the following generalized eigenvalue problem (GED)

$$\frac{1}{M}\mathbf{R}\mathbf{w} = \beta\mathbf{D}\mathbf{w}. \tag{8}$$

From the definition in (8) and the structure of $\mathbf{R}$ and $\mathbf{D}$, we can obtain $\beta\mathbf{w}_k$, for $k = 1, \ldots, M$ as the solution of the following least squares (LS) regression problems

$$J_{LS}(\beta\mathbf{w}_k) = \left\|\mathbf{X}^H[n+k-1]\beta\mathbf{w}_k - \hat{\mathbf{s}}^H\right\|^2, \tag{9}$$

and these solutions can be obtained iteratively using the technique proposed in [4].

As we have pointed out, the CCA problem can be interpreted as a function of correlations or distances. Furthermore, it has been proved in [4] that the proposed generalization of the CCA problem to $M > 2$ data sets is equivalent to the maximum variance (MAXVAR) generalization proposed by Kettenring in [3], which is formulated as the problem of finding a set of vectors $\mathbf{v}_k$ and the corresponding projections $\mathbf{y}_k = \mathbf{X}^H[n+k-1]\mathbf{v}_k$, which admit the best possible one-dimensional PCA representation and subject to the constraint $\|\mathbf{y}_k\| = c$; i.e. the cost function to be minimized is

$$J_{PCA}(\mathbf{v}) = \min_{\hat{\mathbf{s}},\mathbf{a}} \frac{1}{M}\sum_{k=1}^{M}\|\hat{\mathbf{s}} - a_k\mathbf{y}_k\|^2 \quad \text{subject to} \quad \|\mathbf{a}\|^2 = M,$$

where $\mathbf{a} = [a_1, \ldots, a_M]^T$ is the PCA vector providing the weights for the best combination of the outputs and $\mathbf{v} = [\mathbf{v}_1^T, \ldots, \mathbf{v}_M^T]^T$. Solving this problem, we conclude that $\mathbf{w}_k = a_k\mathbf{v}_k$, $\hat{\mathbf{s}}_k = a_k\mathbf{y}_k$, and the best one-dimensional PCA representation of the equalized signals $\mathbf{y}_k$ is $\hat{\mathbf{s}} = \frac{1}{M}\sum_{k=1}^{M}\hat{\mathbf{s}}_k$.

Based on this formulation, the CCA problem can be interpreted as a one single step procedure similar to the two steps algorithm in [7]. However, the CCA restrictions ($\|\mathbf{y}_k\| = c$) imply a better performance for colored signals or ill-conditioned channels, where the noise-enhancement problems derived of the MSOSA restriction ($\|\mathbf{w}\| = c$) are avoided.

Initialize $\mathbf{w}(0)$, $\beta(0) = 0$ and $\mathbf{P}(0) = \delta\mathbf{I}$, with $\delta \gg 1$.
Initialize $\sigma(0) \gg 1$.
for n=1,2,... **do**
  Obtain $f_{n-1}(\hat{s}[n-M+1])$ using $\mathbf{w}(n-1)$ and $\sigma(n-1)$.
  Obtain $\mathbf{k}(n)$ and $\mathbf{P}(n)$ with (10) and (11).
  Obtain $\mathbf{e}[n]$ and update $\sigma(n)$.
  Obtain $\beta(n)\mathbf{w}(n)$ from (12).
  Update $\beta(n) = \|\beta(n)\mathbf{w}(n)\|$.
  Normalize $\mathbf{w}(n)$ to $\|\mathbf{w}(n)\| = 1$.
end for

Algorithm 1: CCA-Based Soft Decision Feedback Equalizer for SIMO Channels.

4.2. Adaptive CCA Solution

The adaptive CCA algorithm proposed in [4] is based on the application of the recursive least squares (RLS) algorithm to the LS problems defined in (9). Furthermore, the fact that all CCA data sets are delayed versions of $\mathbf{X}[n]$ allows a reduction in the computational complexity due to the calculation of only one (instead of M) set of RLS parameters

$$\mathbf{k}(n) = \frac{\mathbf{P}(n-1)\mathbf{x}[n]}{\lambda + \mathbf{x}^H[n]\mathbf{P}(n-1)\mathbf{x}[n]}, \tag{10}$$

$$\mathbf{P}(n) = \frac{\mathbf{P}(n-1) - \mathbf{k}(n)\mathbf{x}^H[n]\mathbf{P}(n-1)}{\lambda}, \tag{11}$$

where $\mathbf{P}(n)$ is the inverse of the correlation matrix

$$\mathbf{\Phi}(n) = \sum_{l=0}^{n}\lambda^{n-l}\mathbf{x}[l]\mathbf{x}^H[l] = \frac{\hat{\mathbf{R}}_0(n)}{1-\lambda},$$

and $\mathbf{k}(n)$ is the Kalman gain vector of the process $\mathbf{x}[n]$. The adaptive CCA update equation can be written as

$$\beta(n)\mathbf{w}(n) = \beta(n-1)\mathbf{w}(n-1) + \mathbf{K}(n)\mathbf{e}[n], \tag{12}$$

where

$$\mathbf{K}(n) = \begin{bmatrix} \mathbf{k}(n-M+1) & \cdots & \mathbf{0} \\ \vdots & \ddots & \vdots \\ \mathbf{0} & \cdots & \mathbf{k}(n) \end{bmatrix},$$

and $\mathbf{e}[n] = [e_1[n], \ldots, e_M[n]]^H$, with

$$e_k[n] = \hat{s}[n-M+1] - \beta(n-1)\hat{s}_k[n-M+1],$$

and $\hat{s}_k[n-M+1] = \mathbf{w}_k^H(n-1)\mathbf{x}[n-M+k]$.

The overall adaptive CCA algorithm for blind equalization of SIMO channels is closely related to the fixed-point algorithm for generalized eigendecomposition (GED) proposed in [8]. However, it is interesting to point out that our method is a true RLS algorithm, which uses a reference signal specifically constructed for CCA. This reference signal can be used, for instance, to develop a robust version of the algorithm [9] or to implement a Soft Decision Feedback Equalizer.

4.3. Soft Decision Feedback Equalizer

Frequently, blind equalization problems can make use of known properties of the transmitted signal, such as its pdf, spectral properties or higher order statistics. This is the case in communication problems, where the knowledge of the constellation symbols can

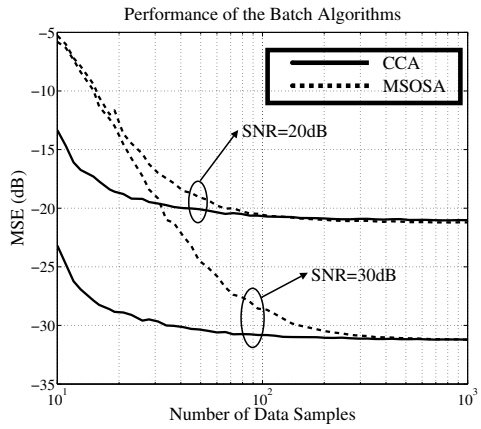

Fig. 2. Performance of the Batch algorithms for different data set sizes.

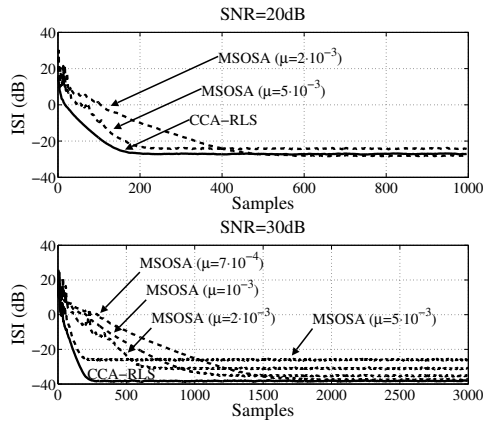

Fig. 3. Convergence of the adaptive algorithms in the example proposed by Li and Liu. $\lambda = 0.9$.

be used to obtain a Soft Decision Feedback Equalizer (SDFE) [10]. The proposed adaptive CCA algorithm can be easily modified to obtain a SDFE in the following way

$$e_k[n] = f_{n-1}(\hat{s}[n-M+1]) - \beta(n-1)\hat{s}_k[n-M+1],$$

where $f_n(\cdot)$ tries to make the objective signal closer to the source signal. Working with QAM constellations, and ignoring the indeterminacy in phase and energy (which can be solved by means of a phase recovery algorithm [11] and an energy normalization step), we can write

$$f_n(\cdot) = g_n(\Re(\cdot)) + jg_n(\Im(\cdot)),$$

where $\Re(\cdot)$ and $\Im(\cdot)$ denotes the real and imaginary part, respectively, and $g_n(\cdot)$ can be selected as

$$g_n(y) = y_{\text{th}} + \frac{d_S}{2}\frac{\tanh\frac{d_S(y-y_{\text{th}})}{2\sigma^2(n)}}{\tanh\frac{d_S^2}{4\sigma^2(n)}}, \tag{13}$$

where y_{th} denotes the mid-point between the two closer symbols, d_S is the distance between contiguous symbols and $\sigma^2(n)$ is the estimated noise energy after equalization

$$\sigma^2(n) = \frac{1-\lambda}{M}\sum_{l=0}^{n}\lambda^{n-l}\|\mathbf{e}[l]\|^2,$$

which can be sequentially updated by means of the well-known RLS equations. The function defined in (13) can be interpreted as a bias-corrected version of the MMSE estimator [12], and it is equivalent to $g_n(y) \simeq y$ for high noise situations, whereas $g_n(y)$ match the MMSE estimator for low noise situations. In the limiting cases, $g_n(y) = y$ for $\sigma^2(n) = \infty$ and $g_n(y)$ is a hard decision function for $\sigma^2(n) = 0$. Finally, the CCA-based SDFE is resumed in Algorithm 1

5. SIMULATION RESULTS

In this section the performance of the proposed algorithm is evaluated in terms of intersymbol interference (ISI). The composite channel-equalizer impulse response $\mathbf{c} = [c[1], \ldots, c[2M-1]]$ can be obtained from the sum of the diagonals of $\mathbf{C} = \mathbf{W}^H\mathbf{H}$, and the ISI can be defined as

$$ISI = 10\log_{10}\frac{\|\mathbf{c}\|^2 - |c[M]|^2}{|c[M]|^2}.$$

In all the simulations the results of 300 independent realizations are averaged, where the source signals are 16-QAM, the received signals are corrupted by zero-mean white, Gaussian noise, and the selected "length" of the equalizer is $L_{eq} = (L-1)/(K-1)$. Finally, the initialization parameters are

- $\mathbf{P}(0) = 10^5\mathbf{I}$, $\beta(0) = 0$ and $\sigma(0) = 10^5$.
- $\mathbf{w}_k(0)$, for $k = 1, \ldots, M$, are initialized as random vectors.

5.1. Batch Performance

Here the performance of the CCA and MSOSA Batch algorithms is evaluated as a function of the size of the data sets, the channel impulse responses are those proposed in [1], i.e. $[0.6662 - j0.8427, 1.6323 - j0.2503, -0.6617 - j0.4102]$ and $[0.4607 + j0.5789, 0.5855 - j2.6912, 1.3273 - j0.4184]$. The simulation results are shown in figure 2, where the improvement of the CCA method for small data sets is illustrated.

5.2. Online Performance

Here two different examples are presented. The first one is the example proposed in [1], where the observations are corrupted with two different SNR levels. The forgetting factor is $\lambda = 0.9$ and the results are shown in figure 3, where we can see the faster convergence of the CCA-RLS algorithm.

In the second example the performance of the adaptive algorithms for a different SIMO channel is evaluated. The signal to noise ratio is SNR=30dB and the forgetting factor is $\lambda = 0.95$. The impulse response of the SIMO channel is shown in table 1 and the results can be seen in figure 4. As we can see, the CCA advantage is increased with the channel complexity and the soft decision feedback equalizer implies a faster convergence and a lower final ISI. Finally, figure 5 shows the SDFE function in four different temporal points.

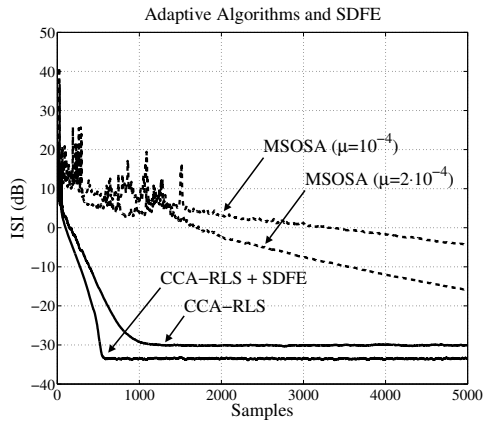

Fig. 4. Convergence of the adaptive algorithms in the second online example. $\lambda = 0.95$, SNR=30dB.

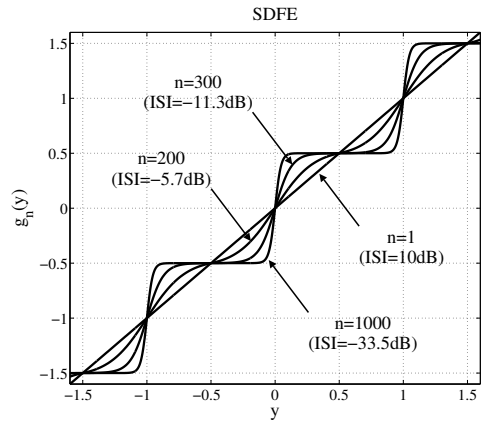

Fig. 5. Function of the Soft Decision Feedback Equalizer in four different temporal points.

$\mathbf{h}_1$	$\mathbf{h}_2$	$\mathbf{h}_3$
$1.786 - j1.989$	$0.245 + j0.974$	$0.873 - j1.234$
$-2.113 + j3.153$	$-2.223 + j1.595$	$-0.939 + j0.914$
$0.256 + j0.484$	$0.428 - j0.485$	$0.302 + j0.090$
$2.230 + j0.109$	$3.061 - j0.564$	$1.077 - j1.980$
$-1.359 - j1.326$	$-0.186 + j0.199$	$-1.155 - j0.238$
$-0.665 - j2.047$	$-1.089 + j0.419$	$0.592 + j0.908$
$1.198 - j2.016$	$0.865 + j1.288$	$0.157 - j0.497$

Table 1. Impulse response of the SIMO channel used in the second online example.

6. CONCLUSIONS

In this paper, the generalization to several data sets of the CCA problem, and a new RLS based algorithm for adaptive CCA have been applied to the blind equalization of SIMO channels. The reformulation of CCA as a set of coupled LS regression problems has been exploited to develop a soft decision feedback equalizer. The performance of the algorithm has been demonstrated through simulations in blind SIMO channel equalization problems, where the adaptive algorithm outperforms other blind equalization techniques based on second order statistics. Further investigation lines include the application of the proposed method to blind equalization of multiple-input multiple-output (MIMO) channels and the extension of the proposed method to kernel CCA (KCCA) or nonlinear equalization.

7. REFERENCES

[1] Y. Li and K. J. R. Liu, "Blind adaptive spatial-temporal equalization algorithms for wireless communications using antenna arrays". *IEEE Communication Letters*, vol. 1, pp. 25-27, January 1997.

[2] H. Hotelling, "Relations between two sets of variates". *Biometrika*, Vol. 28, pp. 321-377, 1936.

[3] J.R. Kettenring, "Canonical analysis of several sets of variables". *Biometrika* 58, pp. 433-451, 1971.

[4] J. Vía, I. Santamaría and J. Pérez, "Canonical Correlation Analysis (CCA) Algorithms For Multiple Data Sets: Application To Blind Simo Equalization". Submitted to *European Signal Processing Conference (EUSIPCO 2005)*.

[5] Y. Li and K. J. R. Liu, "Fast blind adaptive algorithms for equalization and diversity reception in wireless communications using antenna arrays" Inst. for Syst. Res., Univ. of Maryland at College Park, May 1996, Tech. Rep. TR. 96-50.

[6] G. Xu, H. Liu, L. Tong, T. Kailath, "A least-squares approach to blind channel identification". *IEEE Trans. Signal Processing*, vol. 43, pp. 2982-2993, Dec. 1995.

[7] G. B. Giannakis and C. Tepedelenlioglu, "Direct blind equalizers of multiple FIR channels: A deterministic approach", *IEEE Transactions on Signal Processing*, vol. 47, pp. 62-74, January 1999.

[8] Y.N. Rao, J.C. Principe and T.F. Wong, "Fast RLS-Like Algorithm for Generalized Eigendecomposition and its Applications", *J. VLSI Signal Process. Syst. Signal Image Video Technol.*, vol. 37, no. 2, pp. 333-344, 2004

[9] J. Vía, I. Santamaría and J. Pérez, "A Robust RLS Algorithm for Adaptive Canonical Correlation Analysis". *Proc. of 2005 IEEE International Conference on Acoustics, Speech and Signal Processing*, Philadelphia, USA, March 2005.

[10] S. J. Nowlan and G. E. Hinton, "A soft decision-directed LMS algorithm for blind equalization", *IEEE Trans. Commun.*, vol. 41, pp. 275-279, Feb. 1993.

[11] G. Panzi, P. Campisi, S. Colonnese, G. Scalano, "Blind Phase Recovery for QAM Constellations". *Proceedings of the European Signal Processing Conference (EUSIPCO2004)*, Vienna, Austria, September 2004.

[12] S. Haykin, "Blind Deconvolution". Englewood Cliffs: Prentice-Hall, 1994.