Neuronal Architecture for Waveguide Inductive Iris Bandpass Filter Optimization

A.Mediavilla, A.Tazón, J.A.Pereda, M.Lázaro, I.Santamaría, C.Pantaleon
Dpto. Ing. Comunicaciones, ETSI Telecomunicación. University of Cantabria
39005 Santander – SPAIN. Tel. +34-942-201490. Fax. +34-942-201488. Email: media@dicom.unican.es

ABSTRACT

We present a simple and very accurate neuronal architecture approach matching, in a wide range of iris aperture, thickness and frequency, the numerical results obtained by using a precise High Frequency Electromagnetic Simulator for symmetrical inductive irises in rectangular waveguide. For this purpose, a Smoothed Piecewise Linear model (SPWL) has been chosen because this approach permits smooth transitions between linear regions through the use of logarithm of hyperbolic cosine functions, well suited for the frequency behavior of these inductive irises and circuit optimization. The model has been easily implemented into MMICAD®, by using their MDL capability. Comparisons for high order high frequency waveguide filters for satellite applications has been made, showing an excellent agreement with full 3D electromagnetic HP-HFSS® simulations.

INTRODUCTION

At microwave frequencies from about 7 GHz to 60 GHz, inductive irises are very often used as coupling networks between half-wavelength cavities in rectangular waveguide to realize very selective low loss band pass filters. This is due to the fact that symmetrical and off centered irises, Fig.1, along with small tuning posts, are very easy to manufacture for large production volume in satellites for mobile communication systems.

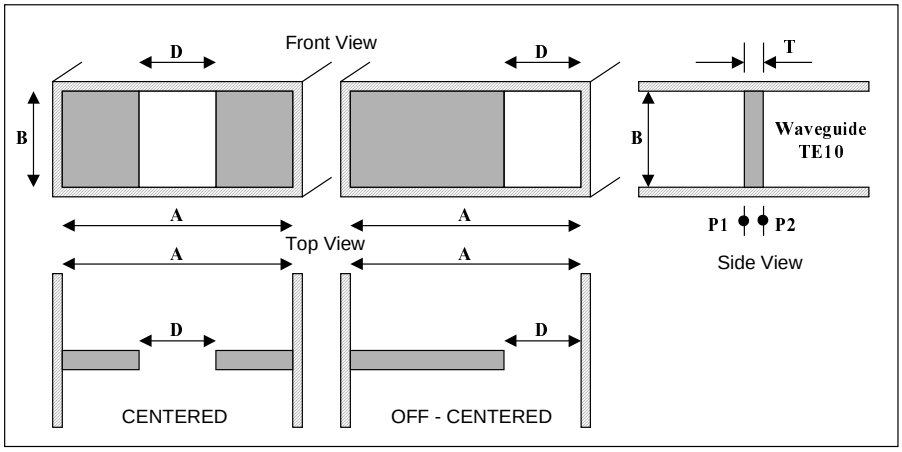

Fig.1.- Centered and Off-Centered Waveguide Inductive Irises

The existing circuit models for waveguide inductive irises, starting from the Marcuwitz's work [1] are published elsewhere, but most of them are developed in terms of recursive closed form equations coming from electromagnetic pseudo quasi static and full wave approaches. Due to the multimode dispersive nature of these electromagnetic discontinuities, these equations are not very easy to implement into commercially available circuit simulators. Furthermore, they are rather tedious and CPU expensive thus not allowing an easy filter optimization process. Their frequency accuracy for a single iris is perhaps enough; but when using a high order filter structure, the propagation of the individual errors through the filter gives poor results: Bandwidth shift, in band attenuation, etc. The second available solution, that is the use of full 3D Electromagnetic simulators such as HP-HFSS® [2], is very accurate but unacceptable in CPU time (several hours) when used for Filter design and Optimization.

0-7695-0619-4/00/$10.00 (C) 2000 IEEE

Instead of searching for more precise, and therefore more complicated closed form equations, the idea proposed here is to use simple and accurate neuronal architectures to overcome the above mentioned problems. As the electromagnetic discontinuity of a single inductive iris of aperture "D" and thickness "T" in a TE10 propagating waveguide (A*B) behaves as a lossless symmetrical two port reciprocal network at the reference planes P1 and P2, it is enough to control a single two port parameter at the output of the neuronal network. For microwave filter applications is convenient to control the forward scattering parameter S21 (easily related to the traditional Z or Y parameters), and furthermore to use the well known properties of the Scattering matrix to derive the other Sij.

At this point it is evident that the input parameters to the neuronal structure should be the physical dimensions of the inductive iris, that is, D and T, along with the waveguide dimensions and frequency of operation. This strategy exhibits an important problem because the standard waveguide dimensions A and B are defined for precise frequency bands where the TE10 is the predominant propagating mode, and in a first approach we should derive a neuronal topology for each waveguide band (which is not a general approach). If we use however the scaling properties of the waveguide structures, we can use as input parameters, Fig.2, the normalized iris dimensions D/A and T/A as well as the normalized frequency F/Fc, where Fc is the cutoff frequency of the TE10 mode.

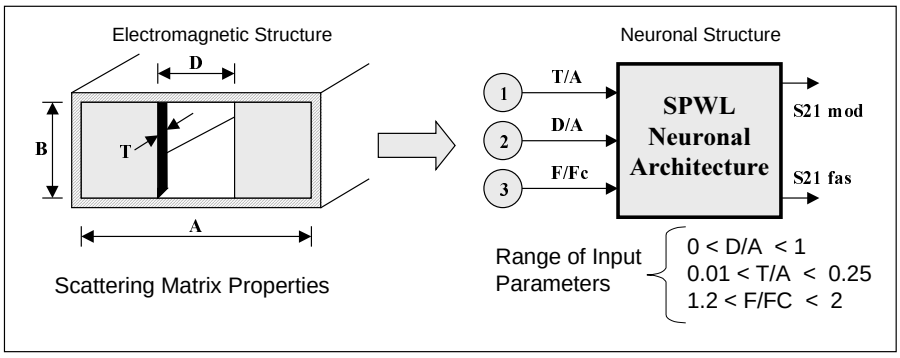

Fig.2.- Equivalence between Electromagnetic and Neuronal Structures

Finally the range of the input parameters should have some constraints regarding the usual waveguide filter utilization. The iris aperture should go from 0 to the maximum aperture A, that is, 0<D/A<1, while a reasonable range for the iris thickness T should be 0.01<T/A<0.25. Furthermore the normalized frequency band should be 1.2<F/Fc<2 in order to avoid unwanted propagation modes. In conclusion this general strategy that uses a single neuronal architecture for the S21 parameter, and three normalized parameters as input data, should be enough for any given frequency band where this kind of filter is applicable.

THE NEURONAL ARCHITECTURE

The Smoothed Piecewise Linear Model is an extension of the well-known Canonical Piecewise Linear Model proposed by Chua [2]. In its basic formulation, the Canonical Piecewise Linear Model performs any general nonlinear mapping $f: R^M \rightarrow R^N$ by means of the following expression

$$f(\boldsymbol{x}) = \boldsymbol{a} + \boldsymbol{B}\boldsymbol{x} + \sum_{i=1}^{0} \boldsymbol{c}_i \left| \langle \boldsymbol{\alpha}_i , \boldsymbol{x} \rangle - \beta_i \right| \tag{1}$$

where x and α_i are vectors of dimension M, a and c_i are vectors of dimension N, B is an N x M matrix, β_i is an scalar and < , > denotes the inner product. The model divides the input space into different regions by means of several boundaries implemented by hyperplanes of dimension M-1. Then, it constructs the function approximation by means of a combination of hinging hyperplanes of dimension M. Such hinging hyperplanes are the result of joining two linear hyperplanes over the boundaries defined in the input space.

It can be seen that the expression inside the absolute value function defines the boundaries partitioning the domain space. This function controls the transition between linear regimes and, therefore, the Canonical Piecewise Linear Model inherits some properties from the absolute value function: it is continuous but not derivable along the boundaries. Moreover, the second and higher order derivatives are zero except at the boundaries where they are discontinuous.

To overcome this drawback, we have proposed to substitute the absolute value function for a derivable function in order to smooth the joint of hyperplanes at the input space boundaries. Several possibilities exist to smooth the absolute value function allowing, at the same time, a parametric control of the "sharpness" of the transition. We have chosen the following smoothing function

$$lch(x,\gamma) = \frac{1}{\gamma} ln\,(\,cosh(\gamma\, x)\,) \tag{2}$$

where γ is a parameter that allows to control the smoothness of the transition. There are several reasons to select this function. For instance, its derivatives do not present overshooting unlike some other commonly used smoothing functions ($x$tanh(x), for instance): this is a clear advantage when we try to fit both a function and its derivatives. In the other hand, the first derivative of (2) is $lch'(x,\gamma) = \tanh(\gamma\, x)$, which is the activation function of a universal approximator such as the MLP. Finally, the proposed SPWL model is given by:

$$f(\boldsymbol{x}) = \boldsymbol{a} + \boldsymbol{B}\boldsymbol{x} + \sum_{i=1}^{\theta} \boldsymbol{c}_i lch(\langle \alpha_i, \boldsymbol{x} \rangle - \beta_i, \gamma_i)\ . \tag{3}$$

The training method used to estimate the network coefficients is an iterative method. After defining an error function to be minimized, in this case the quadratic error, there are two kinds of parameters, which are adjusted in a different way. The parameters defining the partition of the input space, α_i and β_i are adjusted by means of a second order gradient method, estimating the gradient and the hessian of the surface error with respect to these parameters and then moving them in the opposed direction. Once we have an input partition, the error function is a quadratic function of the parameters defining the linear combination of the components of the model, a ,B and c_i. Therefore the optimal coefficients for a given partition can be easily determined.

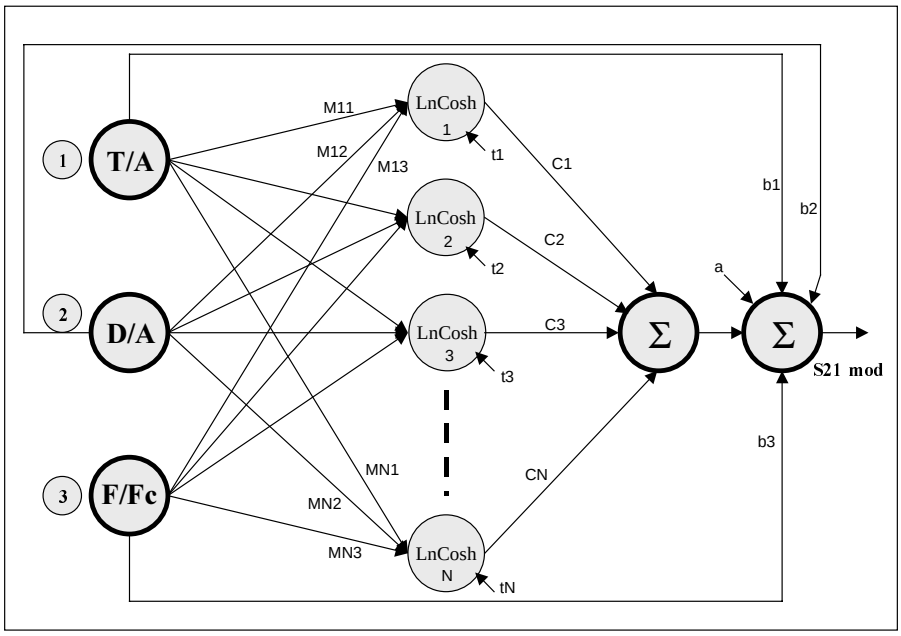

Fig.3.- Neuronal Architecture for the magnitude of S21

The training algorithm consists in an iterative two steps process. In the first step, the boundaries are moved by gradient, and in the second step the optimal coefficients for this partition are calculated. The algorithm begins selecting a random partition, and it is repeated until a suited error is reached. This method is equivalent to the proposed by Chua [3], and a more detailed description of the algorithm for the Smoothed Piecewise Linear Model can be found in [4].

The above description has been applied to our electromagnetic structure as shown in Fig,3. This model provides a smooth and derivable approximation that improves considerably the performance of the Canonical Piecewise Linear Model when it is applied to real microwave devices, mainly in the optimization process. Moreover it requires a smaller number of parameters and a lower computation burden than other commonly used networks like, for example, the multilayer perceptron, which makes it specially suited to this application. Extensive simulations have shown that our architecture is able to reproduce the two port complex S21 parameter for a wide range of input data: ($0.01 < T/A < 0.25$) , ($0 < D/A < 1$) and ($1.2 < F/Fc < 1.9$) thus covering most satellite of applications. In this case we have very good individual iris fit by using a seven order SPWL : the maximum error in S21 for any individual iris, when compared with HFSS simulation, is less than 0.02 in module and less than 4 degrees in phase.

MODEL VALIDATION

Although it is very easy to show how the proposed method accurately fits the frequency behavior of individual inductive iris, when designing high order microwave filters the propagation of the individual errors can be important: mainly for very narrow band bandpass filters. This fact is a higher level test of the validity of the individual models of the iris. For this reason we have implemented the neuronal architecture into MMICAD® [5], by using their MDL capability along with the flexibility in working with model and local variables. We have tested up to 21 different multi section Chebyshev band pass filters in different waveguide bands, always showing very good agreement with full 3D Electromagnetic simulations, and having a CPU simulation times more than 1000 times faster than any conventional analysis. Furthermore, the filter optimization process takes only a few seconds. This is due to the fact that the chosen algorithm is not only very fast but also continuous in their high order derivatives.

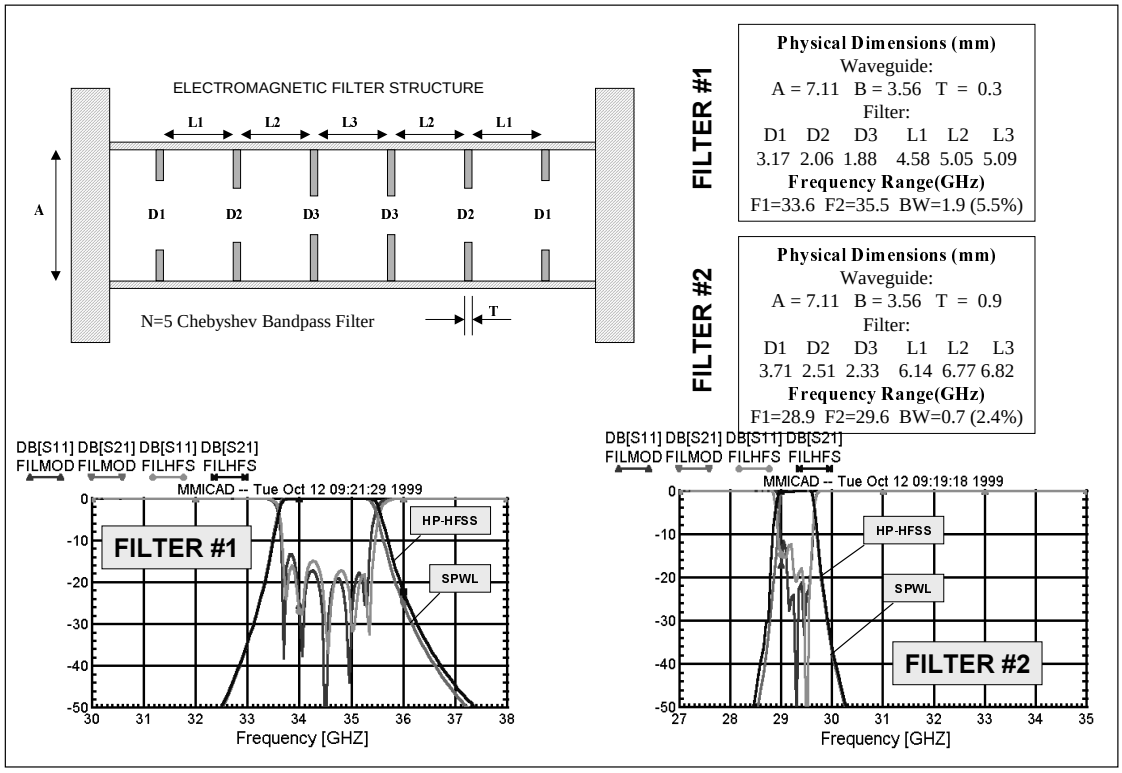

Fig.4.- Model Validation through Filter Implementation

Fig.4 shows the general structure for satellite microwave filters that use symmetrical inductive irises in a waveguide environment. For validation purposes we have chosen the WR22 waveguide Ka band (26.5-40.0 GHz), where we have designed and optimized two very different N=5 (6 iris discontinuities) Chebyshev bandpass filters. FILTER#1 uses symmetrical irises having moderate (0.3mm) thickness, with a center frequency at Fo=34.55 GHz and having a fractional bandwidth of 5.5%. Conversely FILTER#2 is a very narrow band waveguide filter (2.4% fractional bandwidth) centered at Fo=29.25 GHz that uses very thick (0.9mm) irises. In both cases all the physical dimensions are shown in the figure. In terms of analysis, HP-HFSS means full 3D electromagnetic simulation and SPWL means neuronal simulation. We can observe that the model implementation is extremely robust, even for very narrow filters, and it is difficult to distinguish between the two simulations.

CONCLUSSION

A very simple and extremely accurate SPWL neuronal architecture for inductive iris in electromagnetic structures has been presented. In order to cover the whole microwave range, normalized physical dimension and frequency have been used as input parameters to the network. Model validation has been done for very different high order microwave filter applications, always showing an excellent agreement when compared with the well known accuracy of a full 3D electromagnetic simulator. As the neuronal architecture is continuous in their high order derivatives, the filter optimization process can be easily accomplished. Finally simulations have shown that the proposed strategy is more than 1000 times faster that any commercially available electromagnetic simulator, thus allowing the microwave engineer to really minimize the microwave filter design process without loss of accuracy.

REFERENCES

[1] Marcuwitz N., “Waveguide Handbook”, McGraw Hill

[2] HP-HFSS “Full 3D Electromagnetic Simulator and Optimizer”, Hewlett Packard Product

[3] L. O. Chua, A. C. Deng, “Canonical piecewise-linear modeling”, *IEEE Trans. Circuits Syst*., vol. 33, no. 5, pp. 511-525, 1986.

[4] M. Lázaro, I. Santamaría, C. Pantaleón, A.Mediavilla, A. Tazón, C. Navarro, “Smoothing the Canonical Piecewise Linear Model: An efficient and derivable large-signal model for MESFET/HEMT transistors”. Submitted to IEEE Trans. on Circuits and Systems I: Fundamental Theory and Applications.

[5] MMICAD is a Commercially available Microwave Circuit Analysis and Optimization Software from OPTOTEK LTD