Interference Channel (IC)

Master Universitario en Ingeniería de Telecomunicación

I. Santamaría

Universidad de Cantabria

Contents

Introduction

2-user SISO-IC

Interference Alignment

Conclusions

Interference channel

- It consists of K transmitters, each one sending information to a different receiver over the same time slot and frequency band
- Several interfering cells within a cellular network

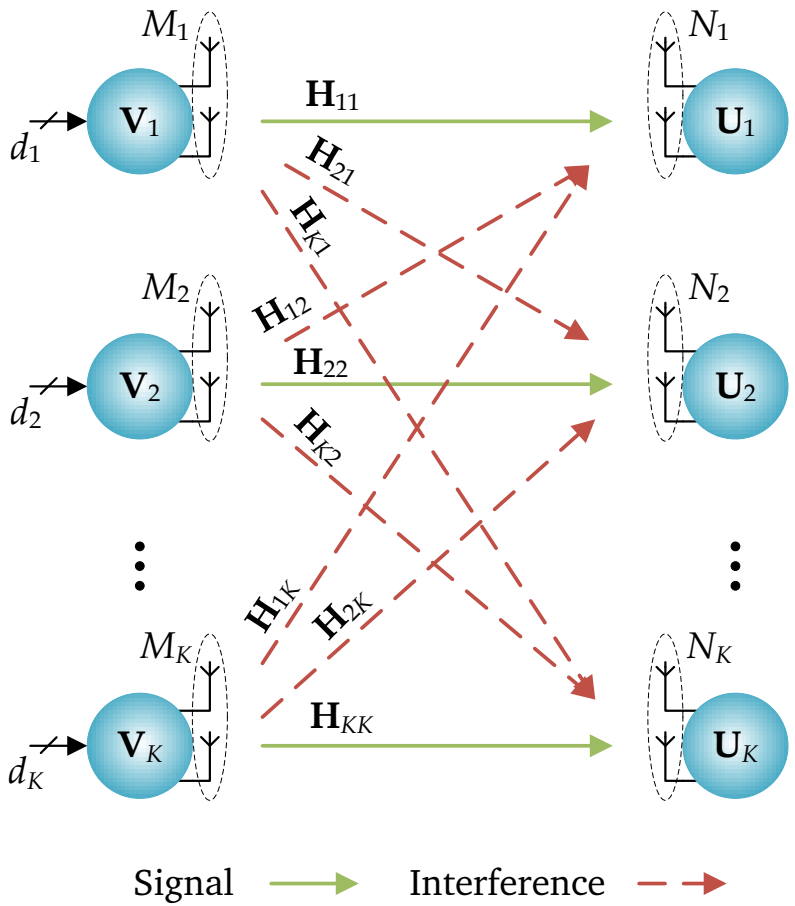

Interference management

There are 3 basic regimes

- If interference is strong $\rightarrow$ **decode**
- If interference is weak $\rightarrow$ **treat as noise**
- If the strength of interference is comparable to the strength of the desired signal
  - Conventional approach $\rightarrow$ **orthogonalize**:
    - In cellular networks, for instance, this is achieved by using a frequency reuse factor $1/K$ among K cells
    - Orthogonalization is a suboptimal approach: each user only gets $1/K$ of the resources
  - New approach $\rightarrow$ **interference alignment**
    - All users can get $1/2$ of the resources!

2-user IC

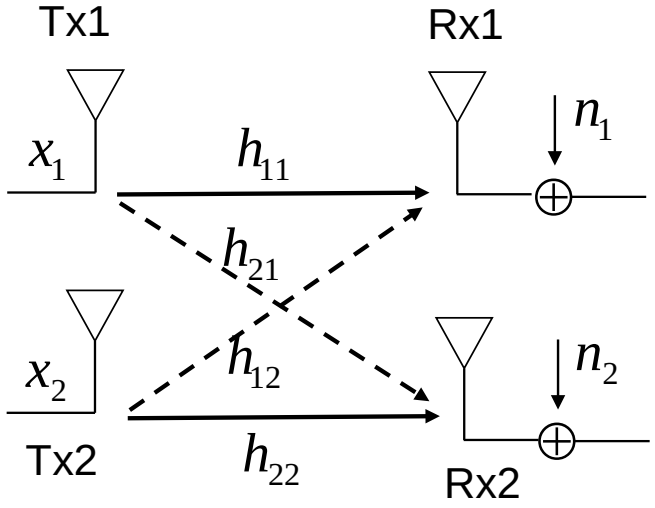

$$y_1 = h_{11}x_1 + h_{12}x_2 + n_1$$

$$y_2 = h_{22}x_2 + h_{21}x_1 + n_2$$

- The transmitters and receivers are single antenna
- The users have average power constraints P_1 and P_2, resp.
- The noises are Gaussian: $n_1 \sim CN(0, \sigma_1^2)$ and $n_2 \sim CN(0, \sigma_2^2)$
- No fading (constant channels)

2-user IC

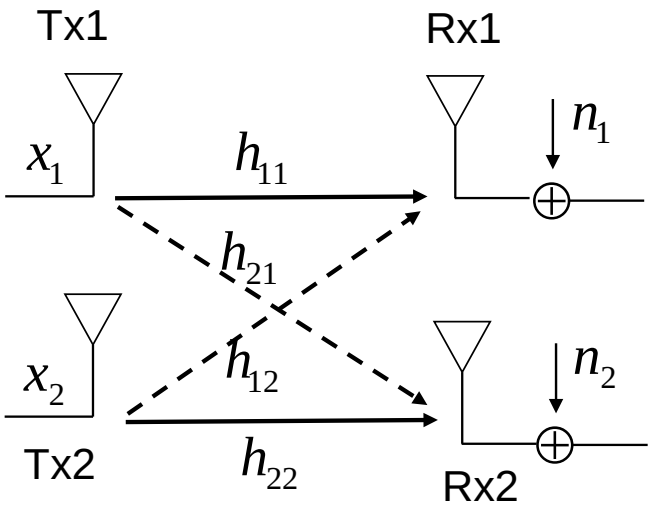

$$y_1 = h_{11}x_1 + h_{12}x_2 + n_1$$

$$y_2 = h_{22}x_2 + h_{21}x_1 + n_2$$

- If the receivers can cooperate, this is a MAC $\rightarrow$ known capacity region
- If the transmitters can cooperate, this is a BC $\rightarrow$ known capacity region
- When there is no cooperation, this is an IC $\rightarrow$ **unknown capacity region** (open problem for more than 40 years!)

Strong interference regime

The strong interference regime happens when the interference level is larger than the desired signal level (INR $>$ SNR)

$$\begin{aligned} P_2|h_{12}|^2 &\geq P_1|h_{11}|^2 \\ P_1|h_{21}|^2 &\geq P_2|h_{22}|^2 \end{aligned}$$

In this regime the capacity is known

- Key idea: in the strong interference regime each user is able to decode the other user's messages and then decode its own message
- Information sent from each transmitter must be **common** information decodable by all
- The capacity region is the intersection of two MAC regions, one at each receiver $\rightarrow$ How it looks like?

$$
\begin{aligned}
R_1 &\leq \log\left(1+\frac{P_1|h_{11}|^2}{\sigma_1^2}\right)\\
R_2 &\leq \log\left(1+\frac{P_2|h_{22}|^2}{\sigma_2^2}\right)\\
R_1+R_2 &\leq \min\left(\log\left(1+\frac{P_1|h_{11}|^2+P_2|h_{12}|^2}{\sigma_1^2}\right),\log\left(1+\frac{P_2|h_{22}|^2+P_1|h_{21}|^2}{\sigma_2^2}\right)\right)
\end{aligned}
$$

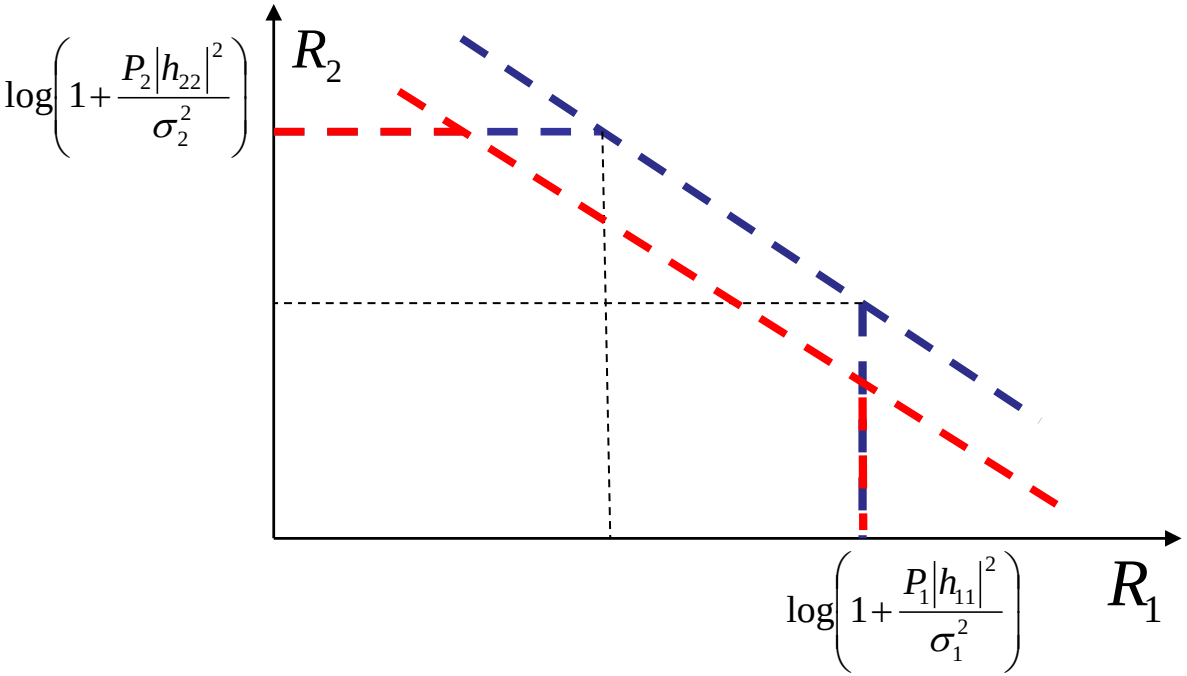

- In general, the capacity region for other regimes (weak or similar strength interference) is still unknown
- This points to a fundamental difference between interference and noise

Noise has no structure whereas interference is structured (can be interpreted, exploited or even decoded)

- In the general case one has to resort to inner (achievable) or outer bounds, or other characterizations of the capacity (degrees-of-fredom, for instance)

Introduction to IA

- We have seen that capacity results are still unknown even for the 2-user IC $\rightarrow$ we need some approximation to capacity useful for designing good Tx-Rx schemes
- One such approximation is the concept of **degrees-of-freedom** (DoF)
- In the following:
  - We define the DoF concept
  - We present a technique called **interference alignment** that is optimal for the IC in a DoF sense

Degrees of freedom (DoF)

- The degrees-of-freedom (DoF) of a system, D, provide an asymptotic characterization of the capacity $C(SNR)$ as a function of the SNR

$$D = \lim_{SNR \to \infty} \frac{C(SNR)}{\log_2(SNR)},$$

- The DoF is equal to the slope of the sum-rate (or capacity) for high SNR
- Is the pre-log factor in the capacity formula

$$C(SNR) = D \log_2(SNR) + o\left(\log_2(\mathrm{SNR})\right)$$

- DoF = multiplexing gain
- Main insight for the IC: number of streams that can be transmitted free of interference

The K-user MIMO IC

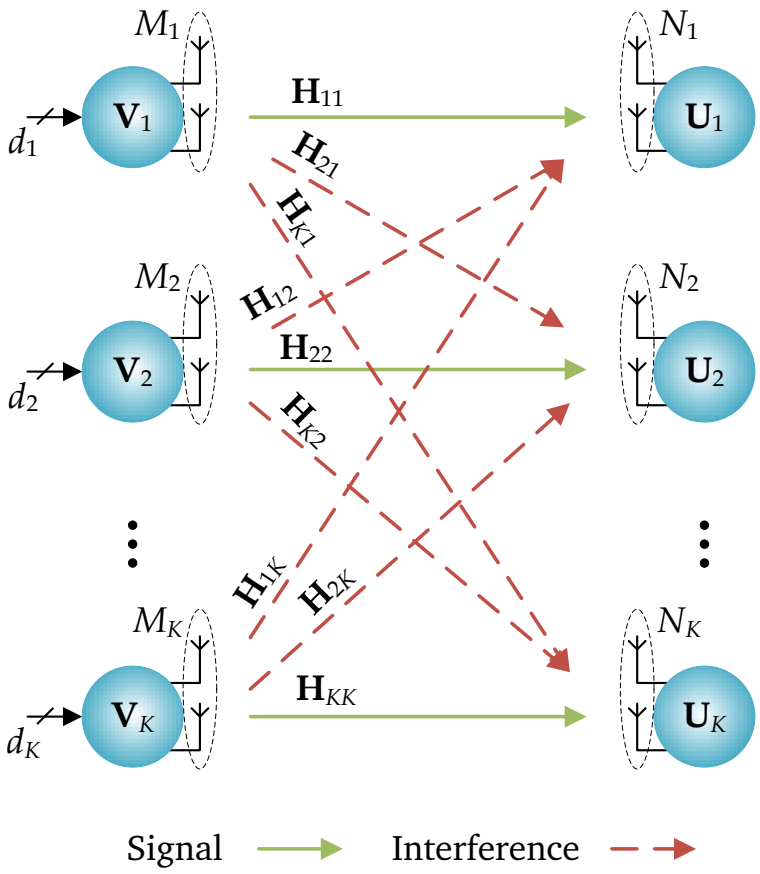

- Half the DoF in the absence of interference are achievable by IA
- **Interference alignment** precoders are designed such that interference overlaps at the undesired destinations, hence reducing the dimensionality of the interference subspace

Signal Model

- K users, $N \times N$ links, d streams
- $\mathbf{H}_{kl}$: Rayleigh flat-fading channel from TX l to RX k
- Linear precoders ($\mathbf{V}_k \in \mathbb{C}^{N \times d}$) and decoders ($\mathbf{U}_k \in \mathbb{C}^{N \times d}$)
- The signal at receiver k is given as

$$\mathbf{y}_k = \mathbf{H}_{kk}\mathbf{V}_k\mathbf{s}_k + \sum_{l \neq k} \mathbf{H}_{kl}\mathbf{V}_l\mathbf{s}_l + \mathbf{n}_k$$

- And after decoding we have

$$\mathbf{U}_k^H\mathbf{y}_k = \mathbf{U}_k^H\mathbf{H}_{kk}\mathbf{V}_k\mathbf{s}_k + \sum_{l \neq k} \mathbf{U}_k^H\mathbf{H}_{kl}\mathbf{V}_l\mathbf{s}_l + \mathbf{U}_k^H\mathbf{n}_k$$

The goal of IA is to find precoders and decoders such that

$$\mathbf{U}_k^H\mathbf{H}_{kl}\mathbf{V}_l = \mathbf{0}, \qquad k \neq l,$$

$$\text{rank}(\mathbf{U}_k^H\mathbf{H}_{kk}\mathbf{V}_k) = d, \forall\, k.$$

An example: the 3-user channel

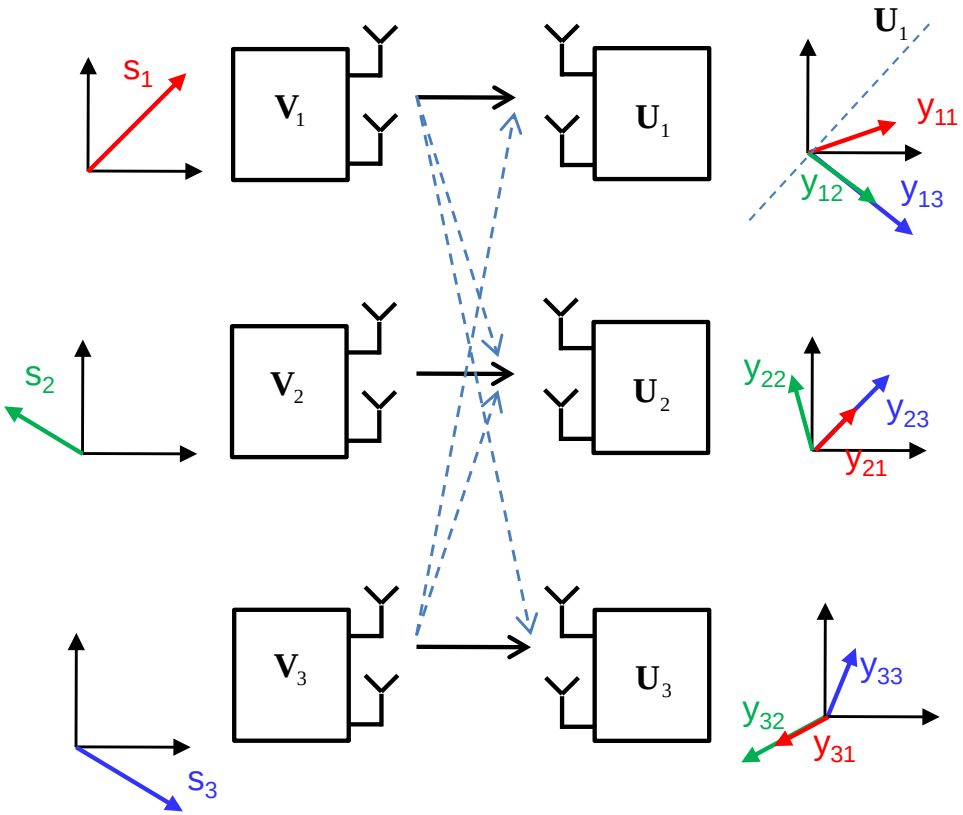

- We use the notation: $(2 \times 2, 1)^3$
- For this example, there is a closed-form solution for the IA precoders

IA solution for the $(2 \times 2, 1)^3$ IC

The alignment equations are

$$\begin{aligned} \mathbf{H}_{12}\mathbf{V}_2 &= \mathbf{H}_{13}\mathbf{V}_3, \quad \text{alignment at } Rx_1, \\ \mathbf{H}_{21}\mathbf{V}_1 &= \mathbf{H}_{23}\mathbf{V}_3, \quad \text{alignment at } Rx_2, \\ \mathbf{H}_{31}\mathbf{V}_1 &= \mathbf{H}_{32}\mathbf{V}_2, \quad \text{alignment at } Rx_3, \end{aligned}$$

To satisfy these equations $\mathbf{V}_1$ must be an eigenvector of

$$\mathbf{E} = (\mathbf{H}_{31})^{-1}\mathbf{H}_{32}(\mathbf{H}_{12})^{-1}\mathbf{H}_{13}(\mathbf{H}_{23})^{-1}\mathbf{H}_{21}$$

Once we know $\mathbf{V}_1$, we can get $\mathbf{V}_2$ and $\mathbf{V}_3$ as follows

$$\begin{aligned} \mathbf{V}_2 &= \mathbf{H}_{32}^{-1}\mathbf{H}_{31}\mathbf{V}_1 \\ \mathbf{V}_3 &= \mathbf{H}_{23}^{-1}\mathbf{H}_{21}\mathbf{V}_1, \end{aligned}$$

Q: How many different solutions for this scenario? **2**

Alternating minimization

- Closed-form IA solutions only exist for a few scenarios, in general one has to resort to iterative algorithms [1]

$$\underset{\{\mathbf{V}_l,\mathbf{U}_k\}}{\text{minimize}} \quad \sum_{k\neq l} ||\mathbf{U}_k^H \mathbf{H}_{kl} \mathbf{V}_l||_F^2 \tag{1}$$

$$\text{subject to} \quad \text{rank}\left(\mathbf{U}_k^H \mathbf{H}_{kk} \mathbf{V}_k\right) = d_k \ , \ k = 1, \ldots, K \tag{2}$$

- Notice that the cost function only depends on the interference channels $\mathbf{H}_{kl}$, and not on the direct channels $\mathbf{H}_{kk}$: this means that the rank constraint in (2) is always satisfied (for generic channels)
- Generic channels: Channels with independent random coefficients drawn from a continuous distribution (e.g., Rayleigh)

[1] K. Gomadam, V. R. Cadambe, S. A. Jafar, "A distributed numerical approach to interference alignment and applications to wireless interference networks", *IEEE Trans. on Inf. Theory*, vol. 57, n6, pp. 3309-3321, Jun. 2011.

Alternating optimization procedure:

- We start by fixing the precoders ($\mathbf{V}_l$, $l = 1, \ldots, K$); then, the interference covariance matrix at the k-th receiver is

$$\mathbf{Q}_k = \sum_{l \neq k} \mathbf{H}_{kl} \mathbf{V}_l \mathbf{V}_l^H \mathbf{H}_{kl}^H$$

- For fixed precoders, the cost function admits a closed-form solution for the decoders

$$\mathbf{U}_k^\star = \nu_{\min, d_k} \left(\mathbf{Q}_k \right)$$

where the notation $\nu_{\min, d_k}(\mathbf{A})$ means taking the d_k smallest eigenvectors of $\mathbf{A}$

Reciprocity

Another important idea for the alternating minimization procedure is to exploit **reciprocity** (network duality)

- We switch the directions of communication
- We transmit using the decoders and receive with the precoders
- In the reverse link, the channels are $\mathbf{H}_{kl}^H$

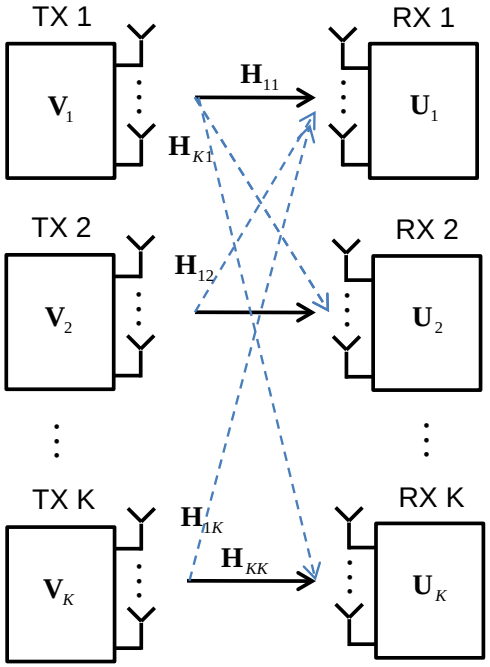

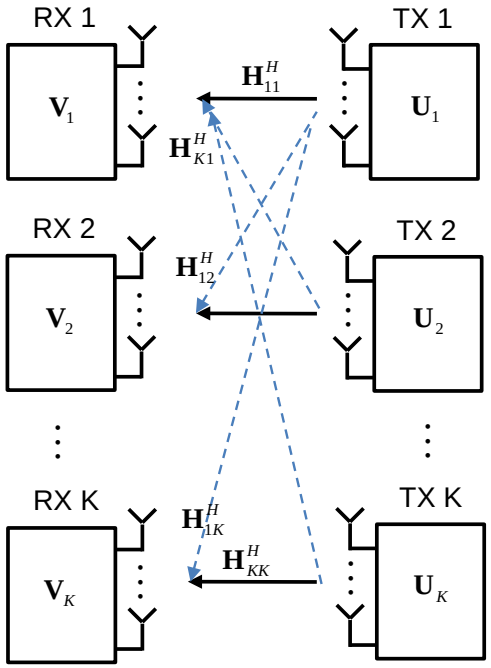

In the reciprocal channel we fix the $\mathbf{U}_k$, $k = 1, \ldots, K$ (which now act as precoders) and obtain the $\mathbf{V}_l$, $l = 1, \ldots, K$ (which now act as decoders)

- If the $\mathbf{U}_k$, $k = 1, \ldots, K$ are now fixed, the interference covariance matrix at the l-th transmitter is

$$\mathbf{Q}_l = \sum_{k \neq l} \mathbf{H}_{lk}^H \mathbf{U}_k \mathbf{U}_k^H \mathbf{H}_{lk}$$

- And the new $\mathbf{V}_l$ are

$$\mathbf{V}_l^\star = \nu_{\min, d_l}(\mathbf{Q}_l)$$

- The alternating minimization procedure iterates this process in a ping-pong fashion until convergence
- If the system is feasible (that is, if an IA solution exists) the algorithm typically converges and finds a solution (convergence is not guaranteed though)

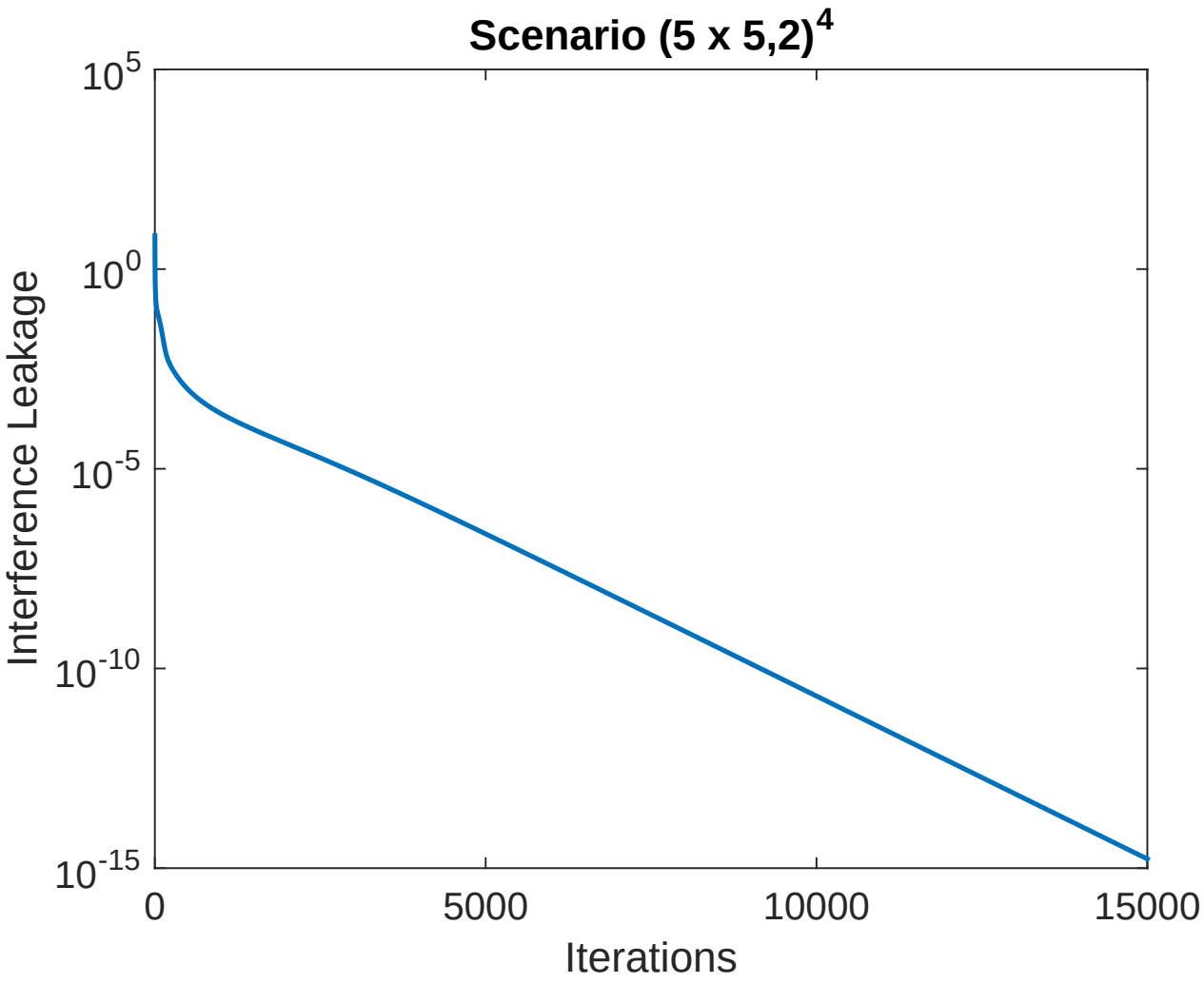

- For other systems, e.g. $(7 \times 13)^5$, the algorithm does not converge, suggesting that an IA solution might not exist

Conclusions

- The capacity of the IC channel is only known for a few particular cases (strong interference regime)
- The DoF provide an asymptotic characterization of the capacity region (number of streams free of interference)
- DoF are maximized by aligning the interference from other transmitters in a low-dimensional subspace $\rightarrow$ Interference alignment (IA)
- Closed-form IA solutions only exist for a few scenarios, in general one has to resort to optimization algorithms such as the alternating minimization procedure